FOR REFERENCE ONLY

SOLENOID VALVE

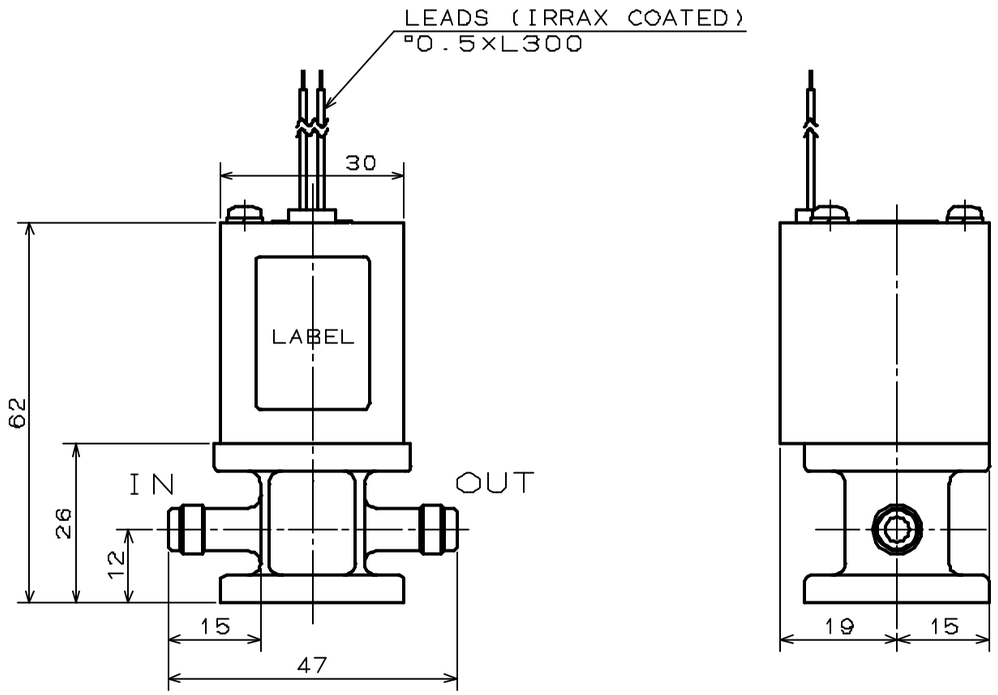

SPECIFICATIONS for MODEL ACV-2-N1

ORIFICE DIAMETER	:	3mm
PORT CONNECTION	:	HOSE BARB
OPERATING PRESSURE RANGE	:	IN -55 ~ 100kPa (-410mmHg ~ 1bar) OUT 0 ~ 50kPa (0 ~ 0.5bar)
FLUID MEDIA	:	FLUIDS CHEMICALLY COMPATIBLE WITH MATERIALS BELOW
MEDIA TEMPERATURE RANGE	:	5 ~ 60℃
AMBIENT TEMPERATURE RANGE	:	0 ~ 40℃
RATED VOLTAGE	:	24VDC、12VDC
POWER CONSUMPTION	:	5W
DUTY CYCLE	:	CONTINUOUS
INSULATION CLASS	:	CLASS E
DIELECTRIC STRENGTH	:	1500VAC FOR 60s

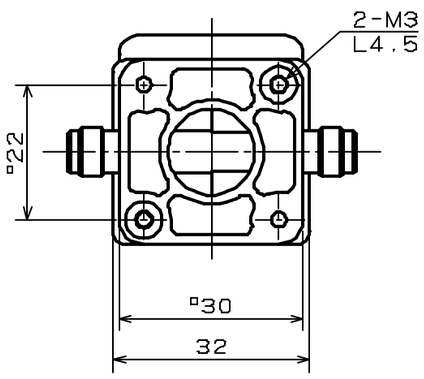

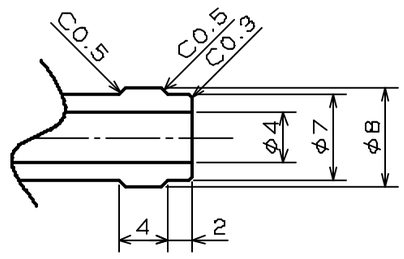

HOSE BARB DETAILS 2/1

WETTED MATERIALS

SYM.	DATE	DESCRIPTION	PART NO	PART NAME	MATERIAL	REQD.	NOTE
△							
△							
△			2	DIAPHRAGM	FPM	1	
			1	BODY	PPO	1	

REVISION

SCALE	APPROVED	CHECKED	DRAWN		DRAWING NO
1/1 A3				SOLENOID VALVE ACV-2-N1	984077-00-S

TAKASAGO ELECTRIC INC MIDORIKU. NAGOYA. JAPAN

2005-04-22