FOR REFERENCE ONLY

SOLENOID VALVE

SPECIFICATIONS for MODEL CTV-3-M6(1/4U)R(K)F-S9

ORIFICE DIAMETER	:	1.2mm
PORT CONNECTION	:	M6、1/4-28UNF
OPERATING PRESSURE RANGE	:	COM -50 ~ 200kPa {-375mmHg ~ 2bar}
		NO、NC 0 ~ 50kPa {0 ~ 0.5bar}
FLUID MEDIA	:	FLUIDS CHEMICALLY COMPATIBLE WITH MATERIALS BELOW
MEDIA TEMPERATURE RANGE	:	5 ~ 50℃
AMBIENT TEMPERATURE RANGE	:	5 ~ 50℃
RATED VOLTAGE	:	12VDC、24VDC
POWER CONSUMPTION	:	3.5W
DUTY CYCLE	:	CONTINUOUS
COIL TEMPERATURE INCREASE	:	MAX. 80℃ FROM ROOM TEMPERATURE
INSULATION CLASS	:	CLASS B
DIELECTRIC STRENGTH	:	1500VAC FOR 60s

NOTE

MODEL NUMBER	VALVE BODY MATERIAL	PORT CONNECTION
CTV-3-M6RF-9	PPS	M6
CTV-3-M6KF-9	PEEK	M6
CTV-3-1/4URF-9	PPS	1/4-28UNF
CTV-3-1/4UKF-9	PEEK	1/4-28UNF

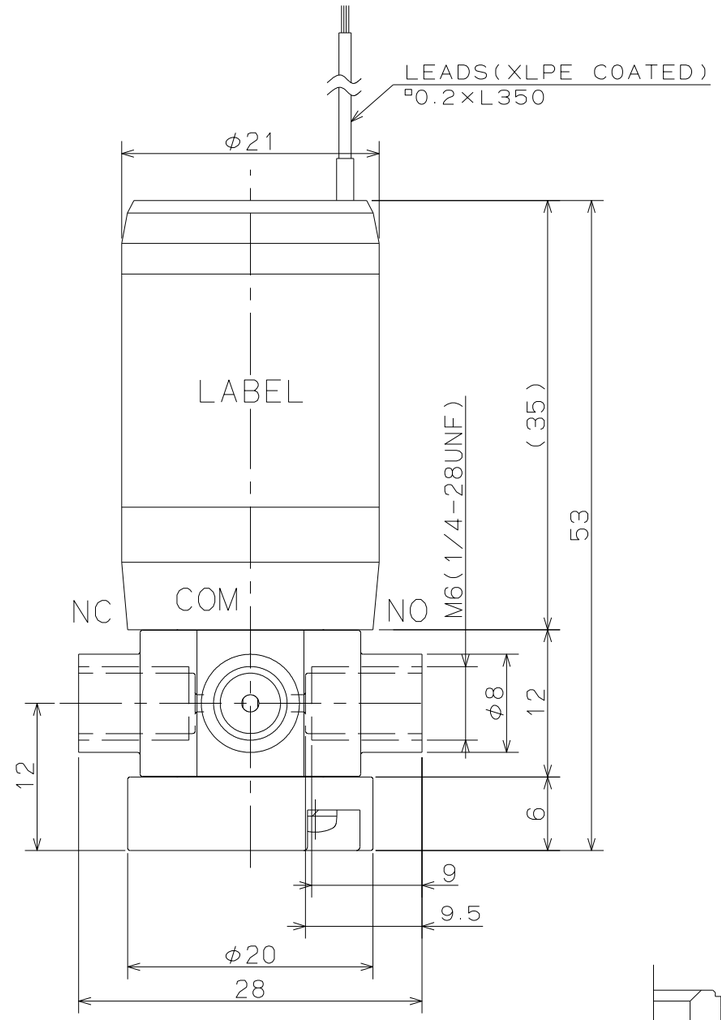

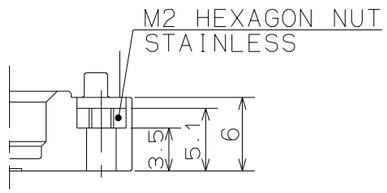

MOUNTING HOLE DETAILS

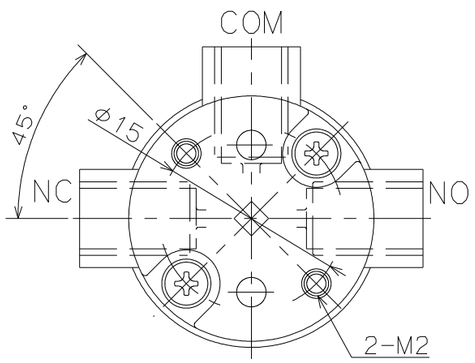

WETTED MATERIALS

SYM.	DATE	DESCRIPTION	PART NO	PART NAME	MATERIAL	REQD.	NOTE
△			4	DIAPHRAGM	PTFE	2	
△			3	SOFT SEAL	FPM	2	
△			2	STEM	Al_2O_3	1	
			1	VALVE BODY	PPS/PEEK	1	

REVISION

SCALE	APPROVED	CHECKED	DRAWN		DRAWING NO
2/1				SOLENOID VALVE CTV-3-M6(1/4U)R(K)F-S9	12222-00-S
A 3					

TAKASAGO ELECTRIC, INC. MIDORIKU, NAGOYA, JAPAN

2012- 7-30